Aldon® SWITCH POINT PROTECTORS

Installation Guide



ALDON®
Safety on Track Since 1904

Aldon Company, Inc. | 3410 Sunset Avenue | Waukegan, Illinois 60087
PH. 847.623.8800 | FX. 847.623.6139
www.aldonco.com | e-rail@aldonco.com

WARNINGS

Make sure the switch point protector matches the rail size and section of the rail it's going to be installed on.

1. Maximum speed limit is 10 m.p.h.
2. Designed for industrial and private sidings only.
3. Switch point protectors should be installed 2-inches in front of the switch point tips.
4. Use Aldon supplied components only.
5. Replace switch point protectors that have excessive wear.

SWITCH POINT PROTECTOR PARTS LIST

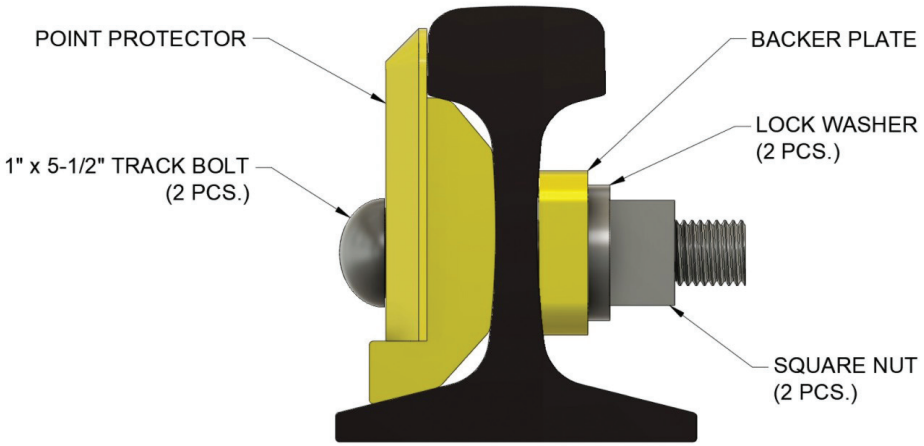

All switch point protectors include the following components.

- (2) 1" x 5-1/2" Track Bolts
- (1) Point Protector (Rail Size Specific)
- (1) Backer Plate
- (2) Lock Washers
- (2) Square Nuts

Replacement parts available upon request.

SWITCH POINT PROTECTOR INSTALLATION

Identify which side of the switch to install the switch point protector.

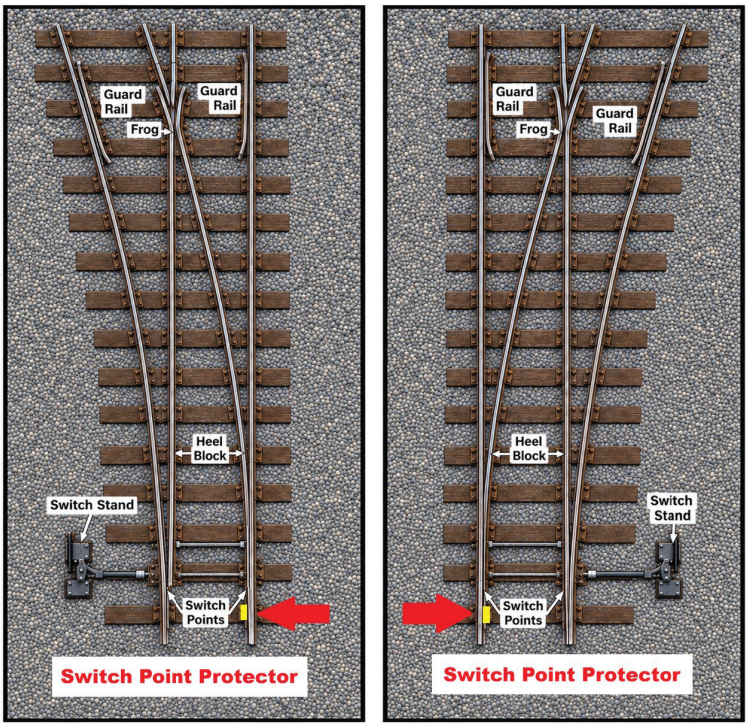

Left Throw Switch **Right Throw Switch**

1. Grind off any rail head overflow.
2. Measure 3-5/8" from the tip of the switch point and mark the top of the rail.
3. Measure 6" over from your first measurement (3-5/8") and mark the top of rail.
4. Use a rail drill with a 1-1/16" cutter and the correct size rail shoe to drill the bolt holes. Bolt holes should have 6" on-center hole spacing.

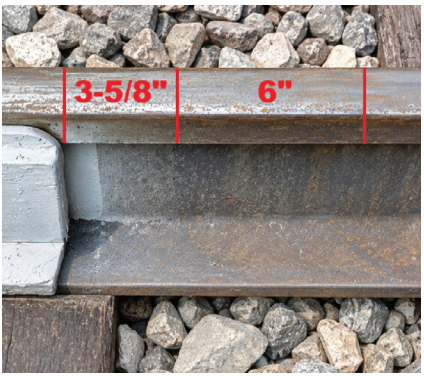

*****Aldon Switch Point Protectors are designed to fit existing joint bar hole locations making the installation process easy.*****

SWITCH POINT PROTECTOR INSTALLATION

Position the protector plate over the predrilled holes and insert the track bolts through the holes. Slide the backer plate over the bolts on the opposite side of the rail and install the lock washers and bolts. Lock washers should be completely compressed.

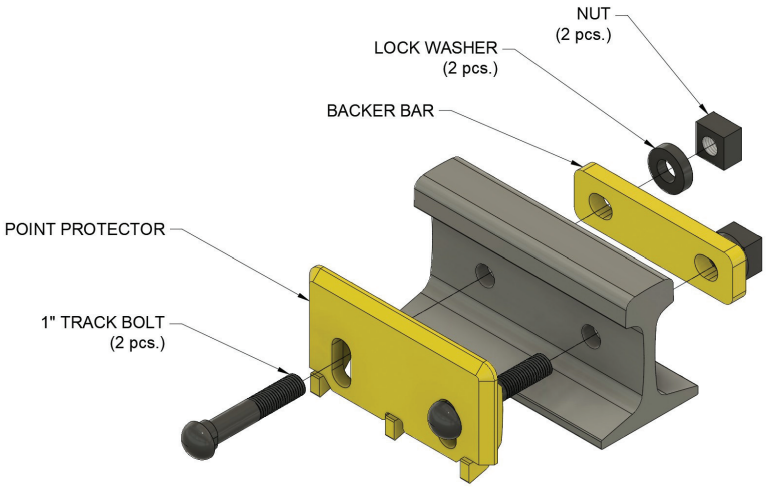

RELATED ITEMS

RailEase Battery Rail Drill Kit
This Battery-Powered Railroad Rail Drill is a lightweight, portable solution for railroad track drilling. Adjustable Rail Shoe option covers 100-141 lb. rail with a single adjustable shoe. (Rail Shoes and cutters are sold separately.)



4123-333

ALDON®
Safety on Track Since 1904

Aldon Company, Inc. | 3410 Sunset Avenue | Waukegan, Illinois 60087
PH. 847.623.8800 | FX. 847.623.6139
www.aldonco.com | e-rail@aldonco.com

Follow us on

Printed in USA November 2026